A Pulse-Driven LC-VCO with a Figure-of-Merit of -192dBc/Hz

Aravind Tharayil Narayanan, Kento Kimura,
Wei Deng, Kenichi Okada, and Akira Matsuzawa

Tokyo Institute of Technology, Japan

Matsuzawa
& Okada Lab.

Contents

Motivation

Low power TRx is required for next gen portable devices

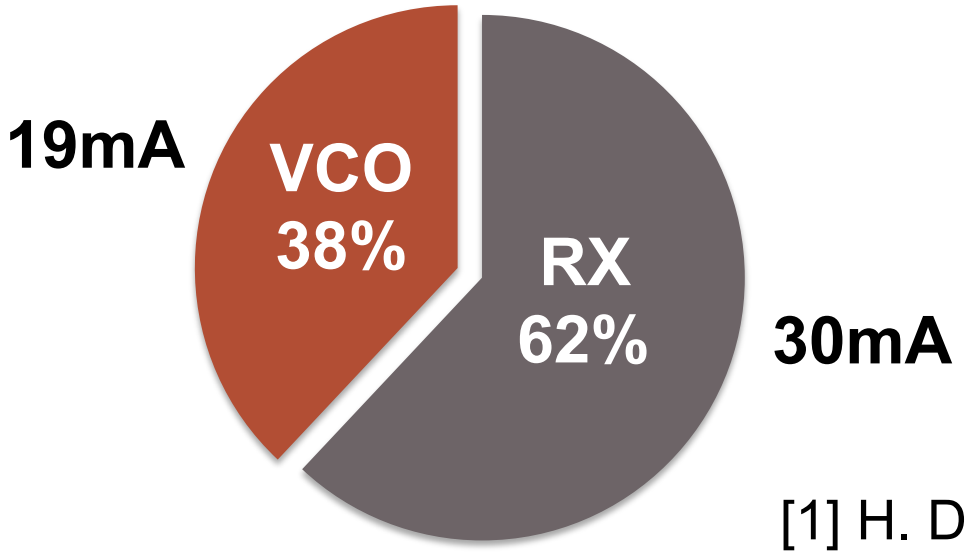

[1] H. Darabi, JSSC 2011.

VCO – A major power consumer in TRx.

VCO for next generation wireless devices

- **High purity**
- **High efficiency**
- **Small area**

Tackling Efficiency: Class-C VCO

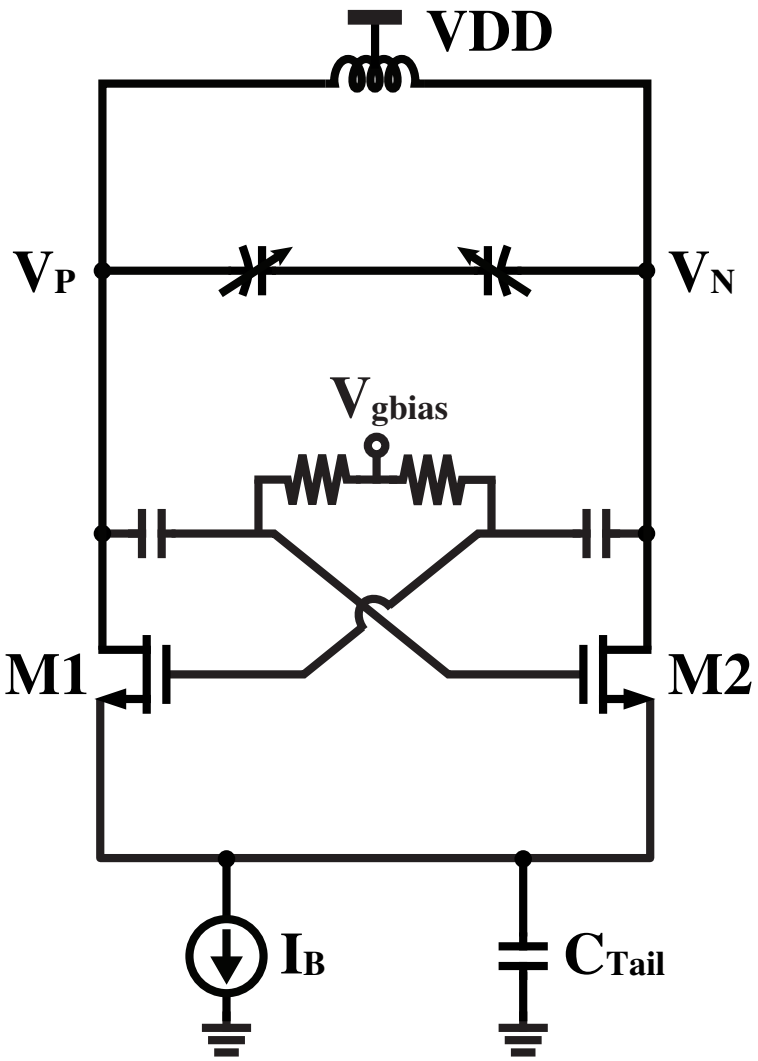

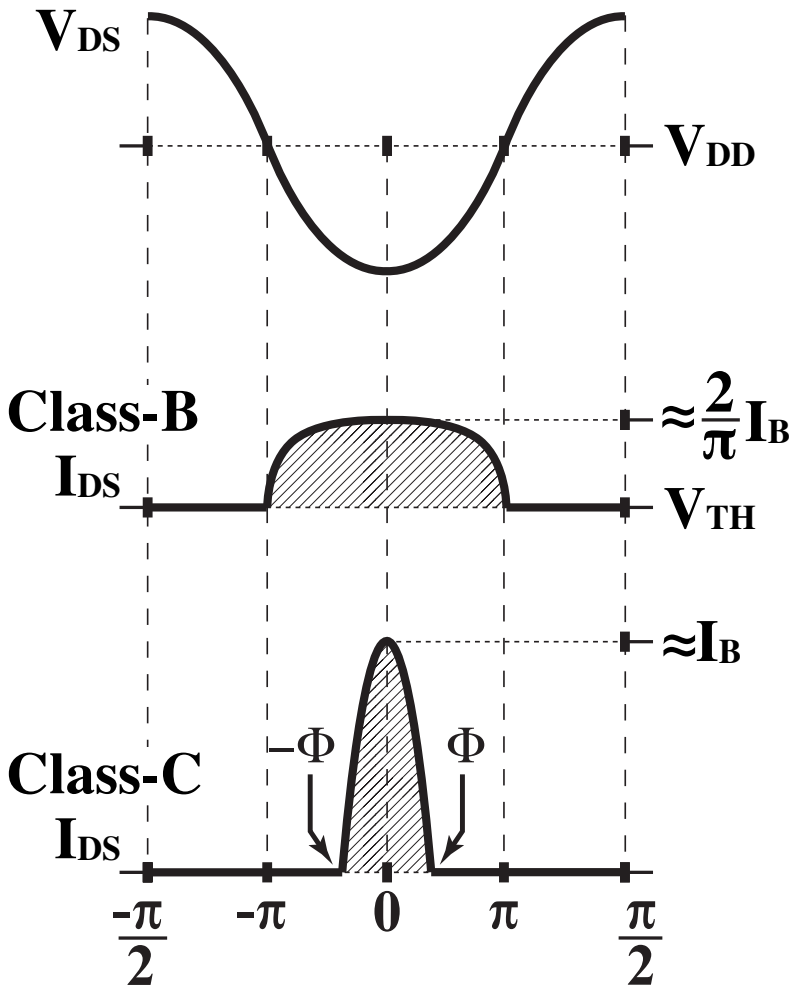

➢ **High current efficiency**

[2] A. Mazzanti and P. Andreani, JSSC 2008.

Efficiency and MOS sizing

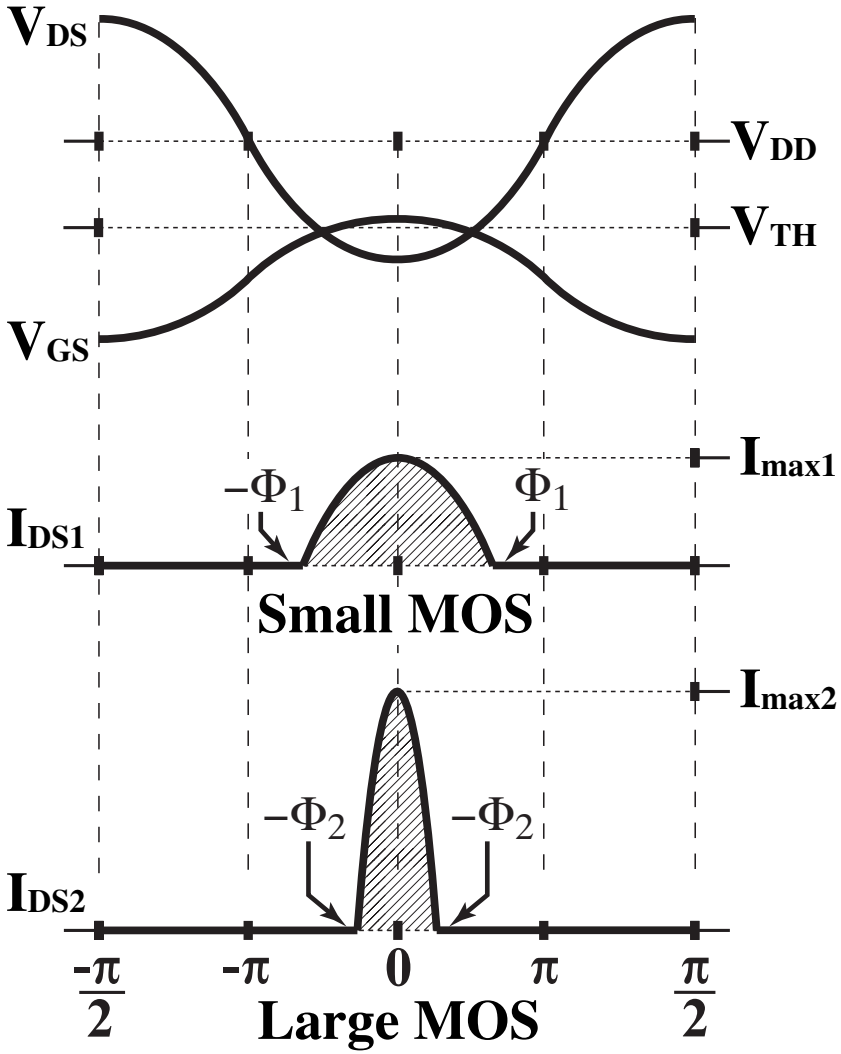

$$A_{max} = \frac{V_{DD} - (V_{GS} - V_{TH})}{2}$$

For high efficiency

- **Large A_{max}**
- **Small V_{GS}**
- **Small conduction angle**

- **Large MOS required for better efficiency**

[2] A. Mazzanti and P. Andreani, JSSC 2008.

Effects of Large MOS

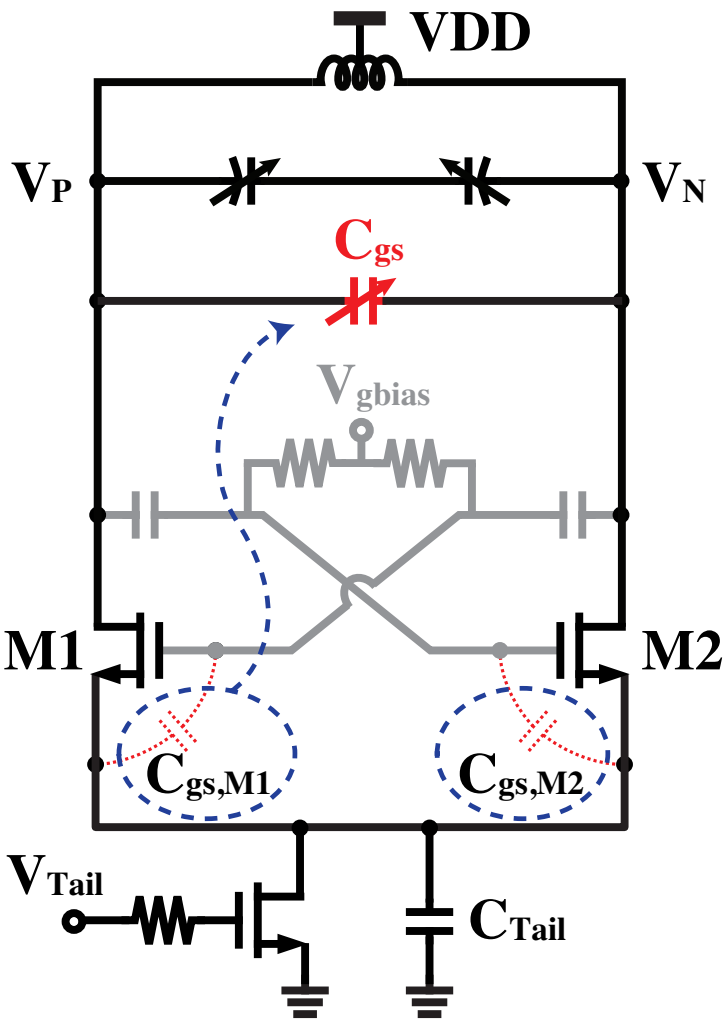

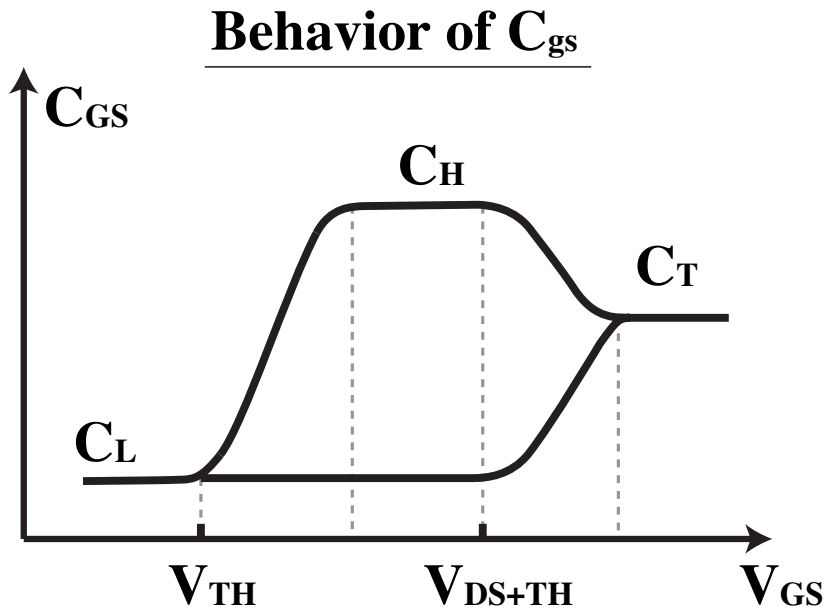

$$C_{gs} = \begin{cases} \frac{2}{3} WLC_{OX} & \text{(saturation)} \\ WL_{OV}C_{OX} & \text{(cut-off)} \end{cases}$$

- Tank capacitance is susceptive to V_{GS} variations.

AM-PM Conversion in Class-C VCO

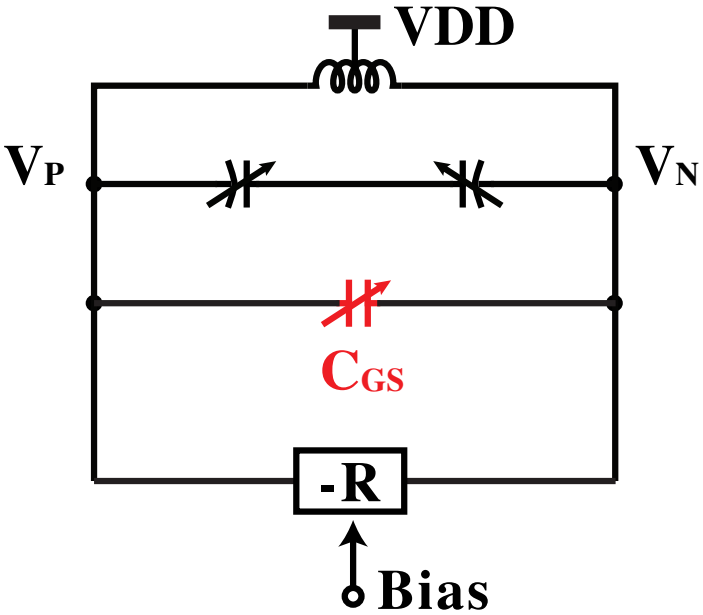

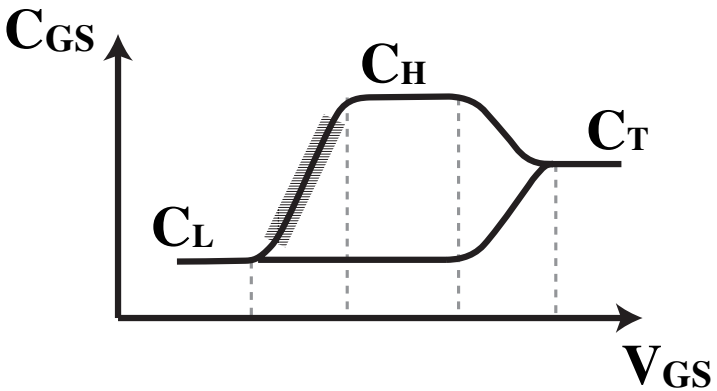

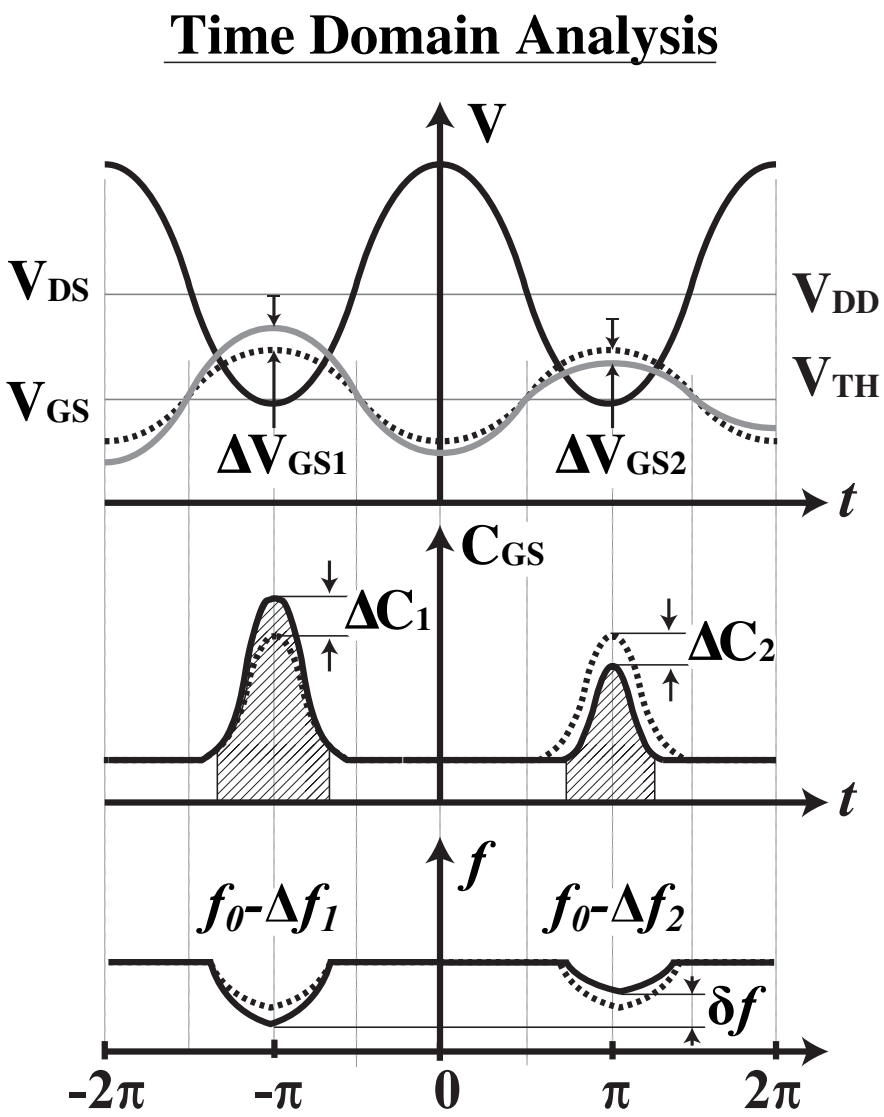

➢ Variations in C_{GS} translates to phase noise.

AM-PM conversion- *Contd.*

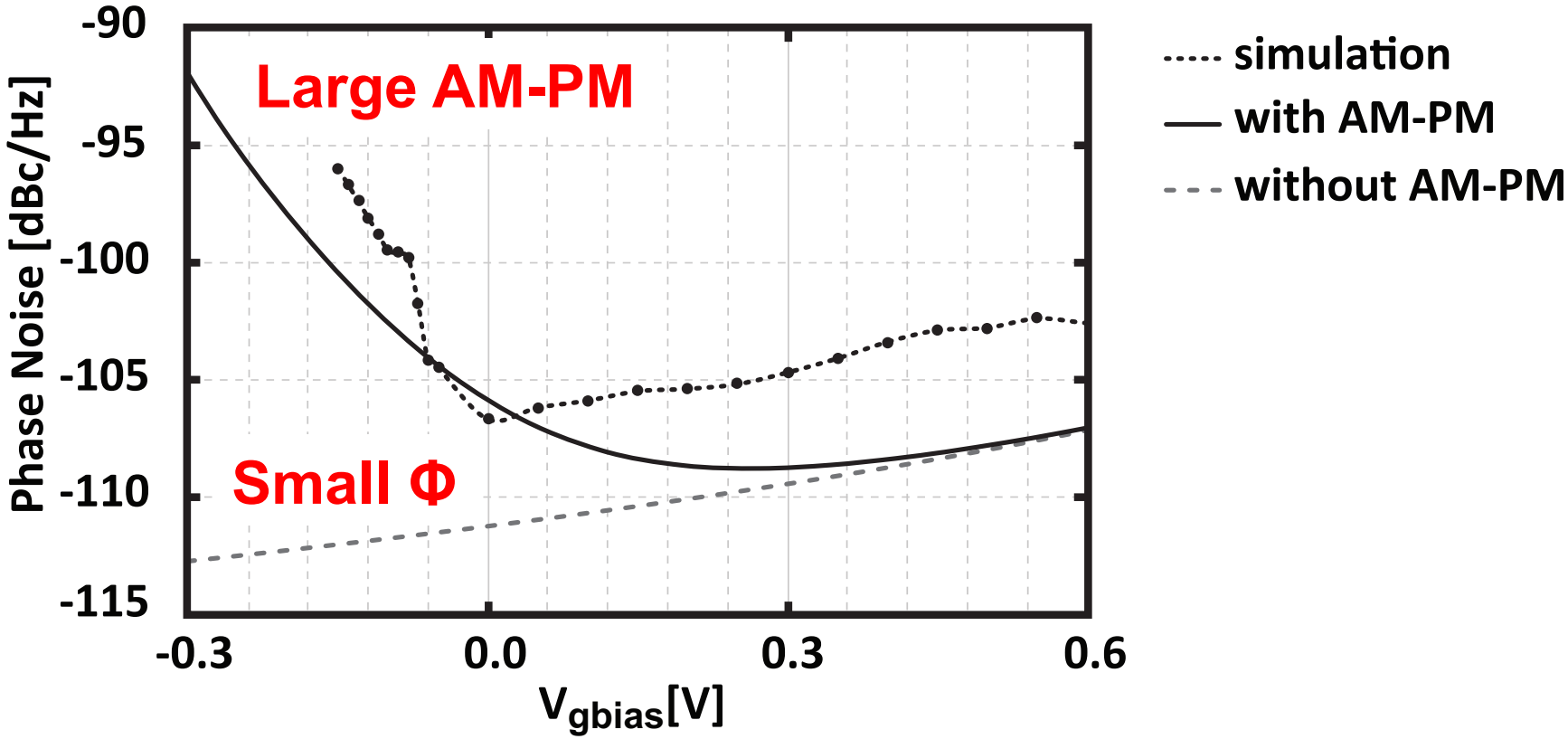

$$\mathrm{PN} = 10log_{10}\left\{\frac{2Fk_BT}{P_{sig}}\left(\frac{\omega_0}{2Q\omega_{offset}}\right)^2\right\} + \left\{\left(\frac{V_M K_{V_{gbias}}}{2\omega_{offset}}\right)^2\right\}$$

$$K_{V_{gbias}} = \frac{\partial\omega}{\partial V_{gs}} \cong \frac{1}{4\sqrt{LC}}\frac{WC_{OX}}{\pi}\left(\frac{2}{3}L - L_{OV}\right) + \frac{1}{KA_t\, sin\phi}$$

- **Smaller Φ with smaller transistor size.**

Issue of Class-C VCO

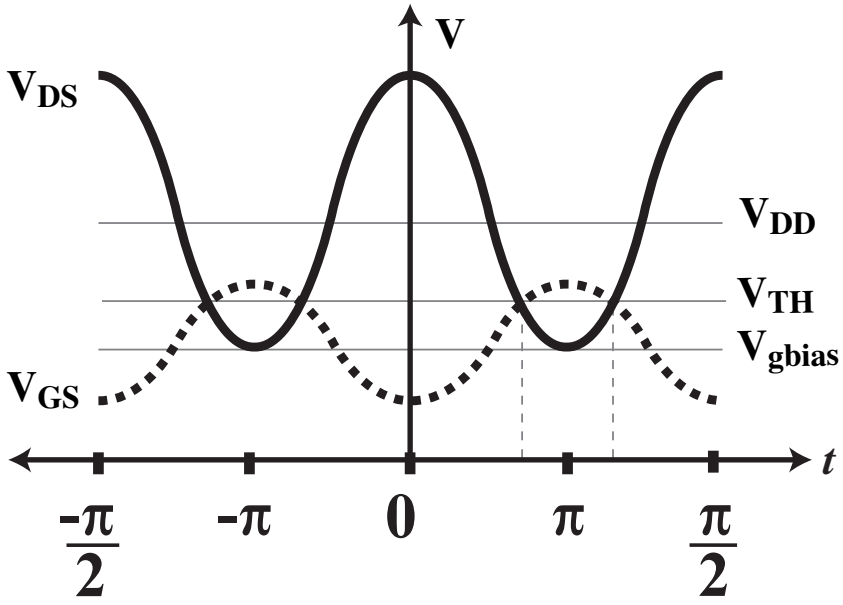

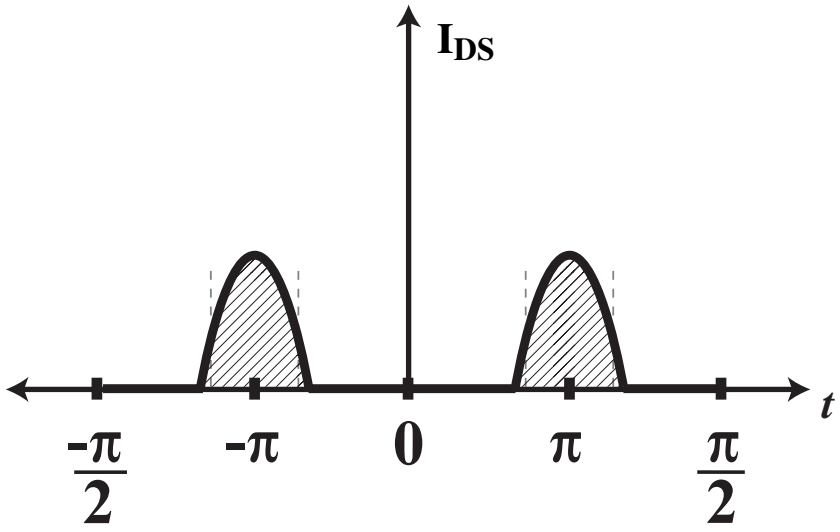

V_{GS}-V_{TH} must be small for small Φ

Large MOS is required for larger current

- **Smaller Φ with smaller transistor size.**

Proposed Pulse-Driven VCO

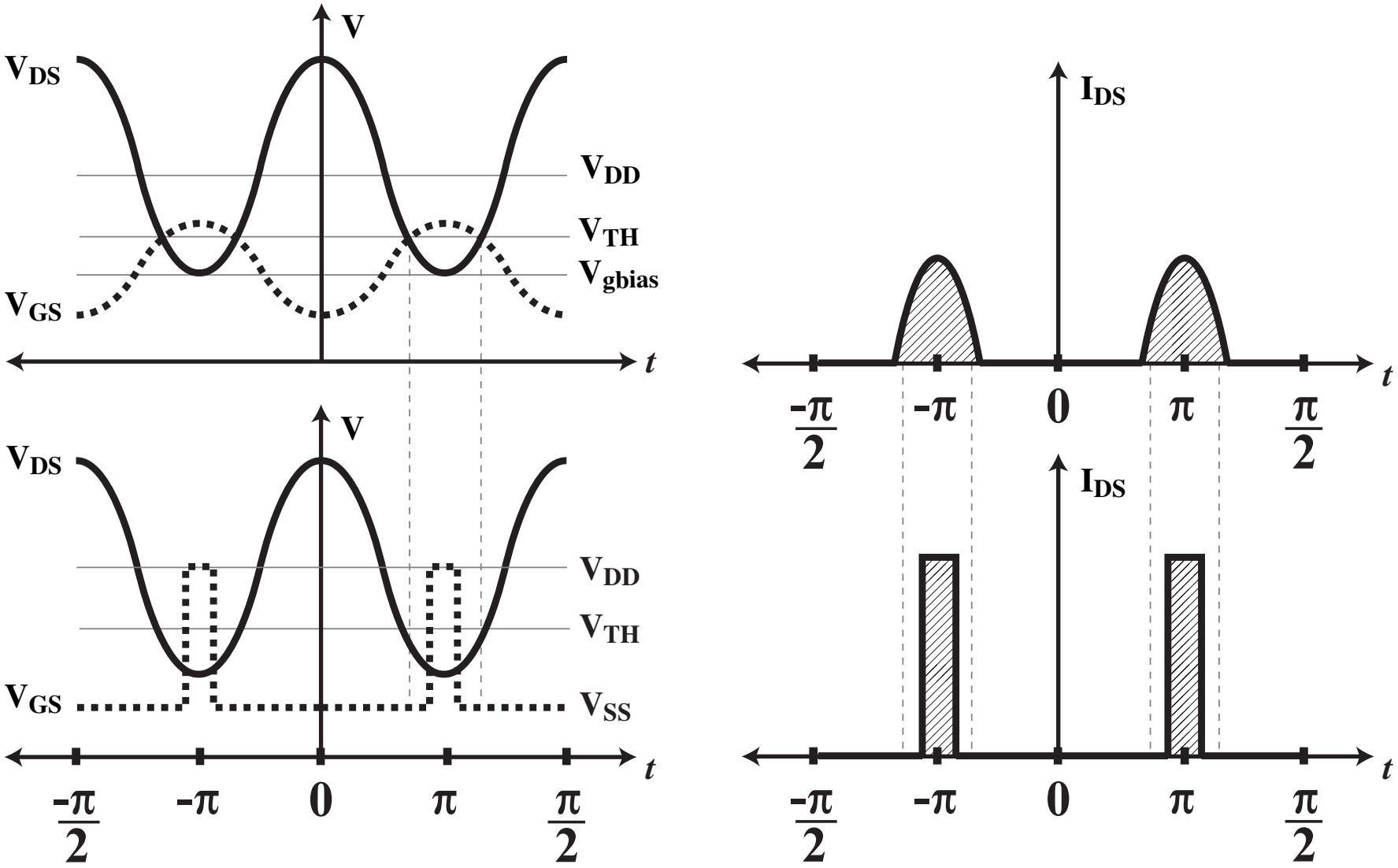

☺ **Conduction angle is independent of MOS size.**

Analysis: AM-PM Conversion

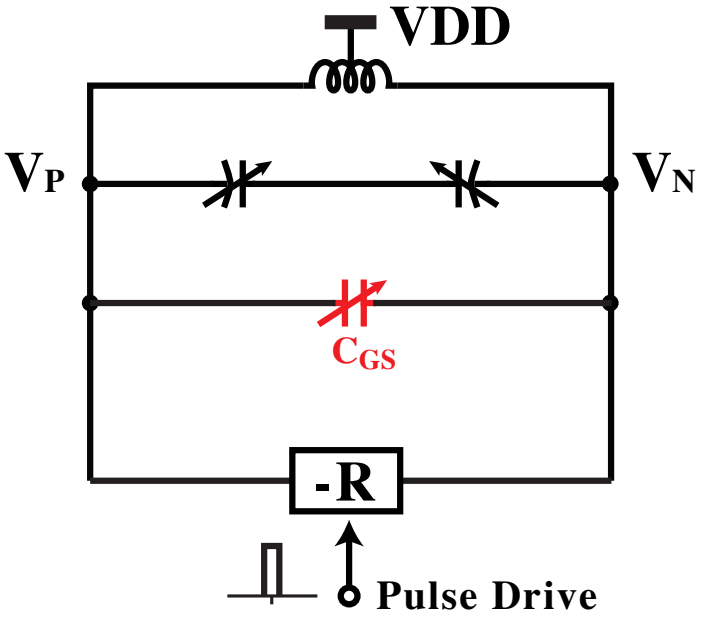

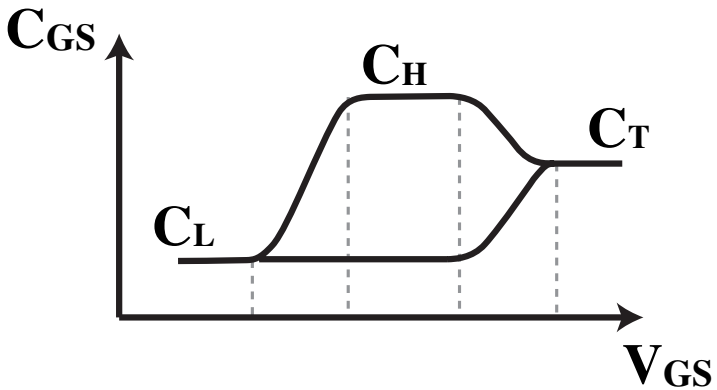

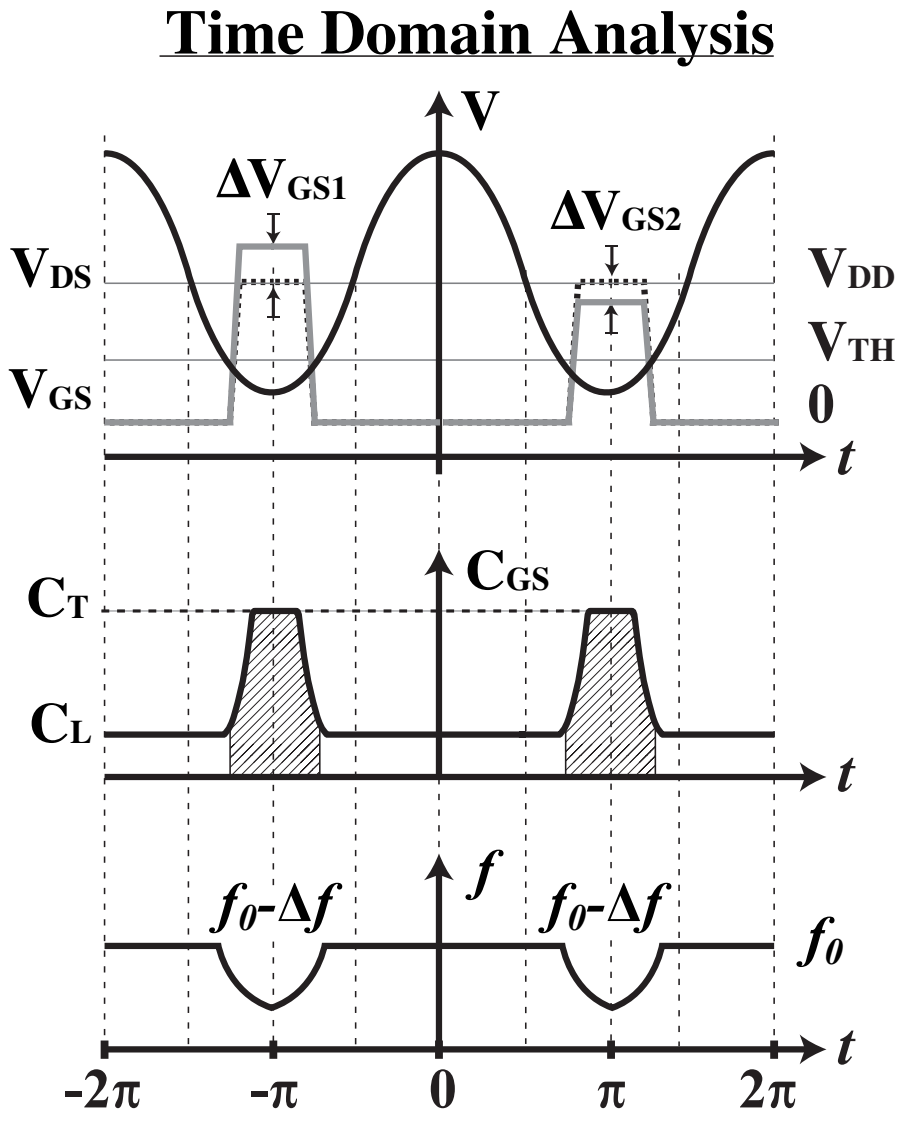

☺ **AM-PM translation is minimized.**

Proposed Circuit Schematic

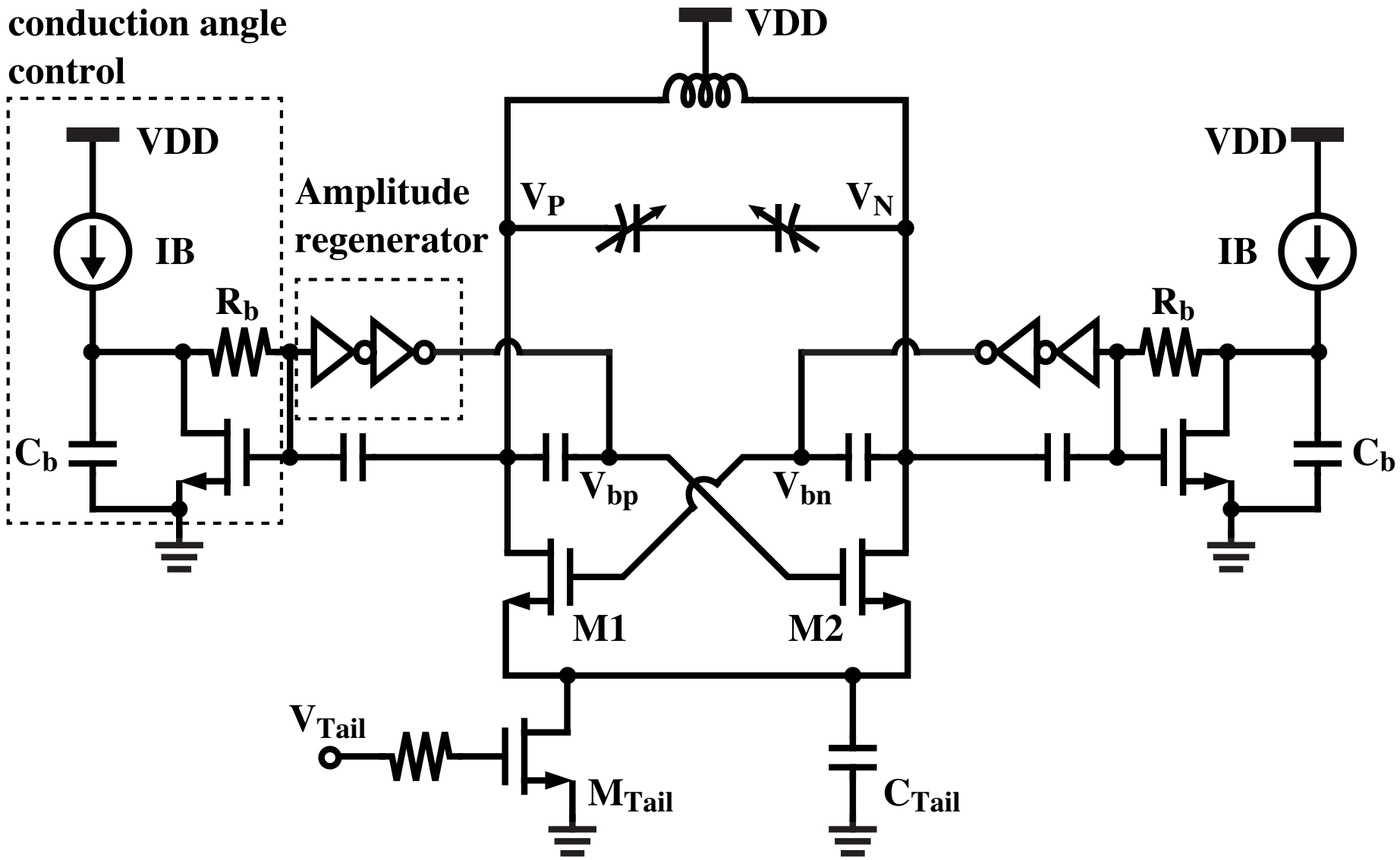

Pulse Drive: Startup

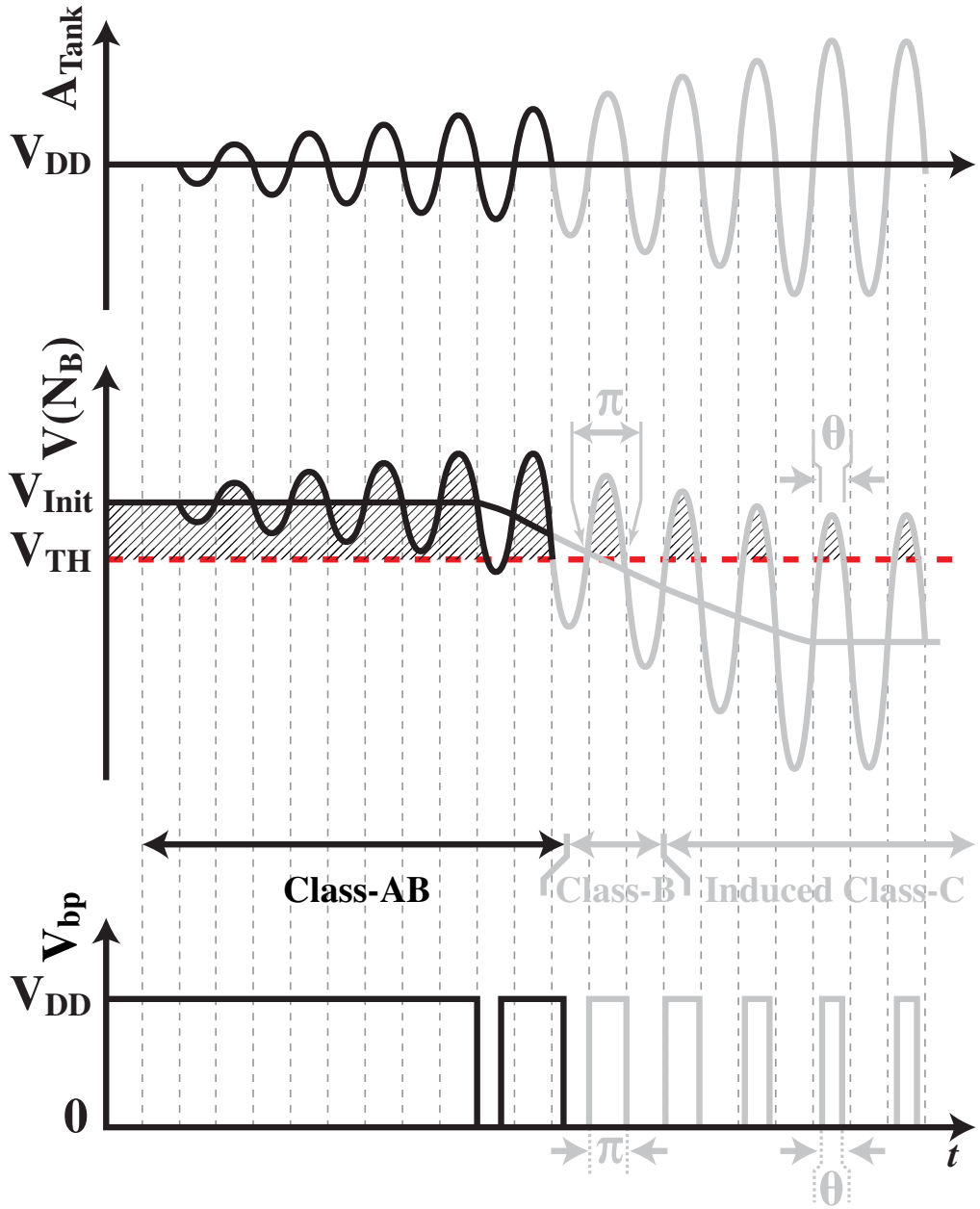

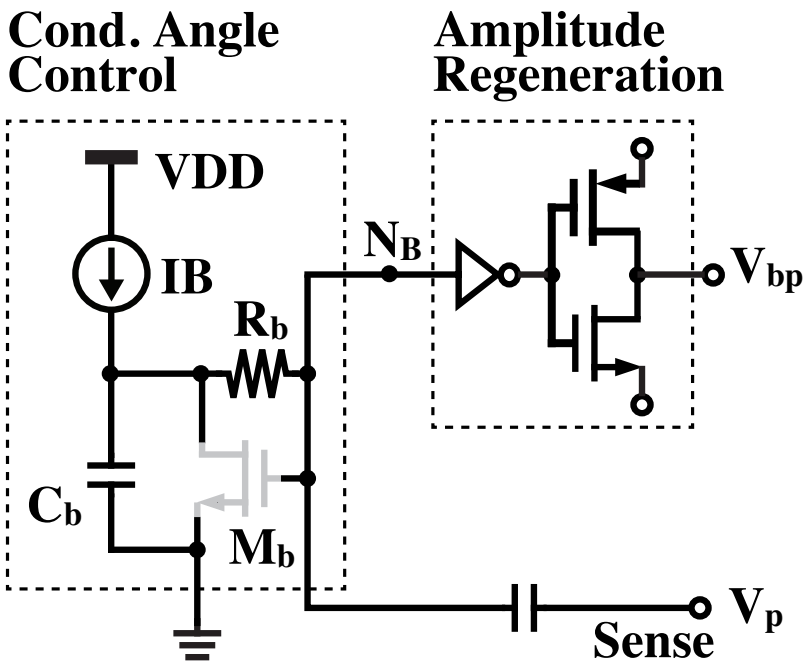

☺ **High robustness**

Pulse Drive: Startup *Contd.*

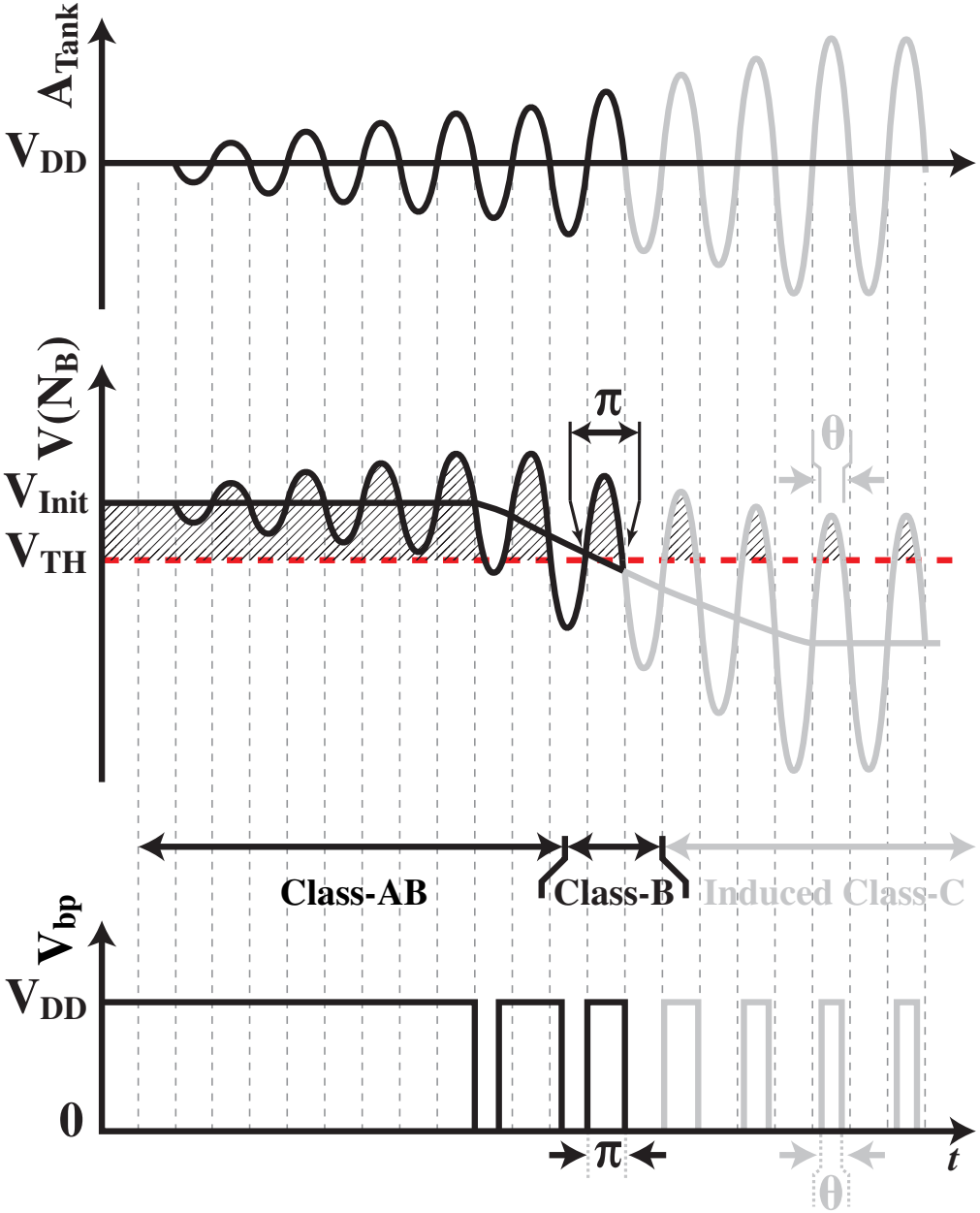

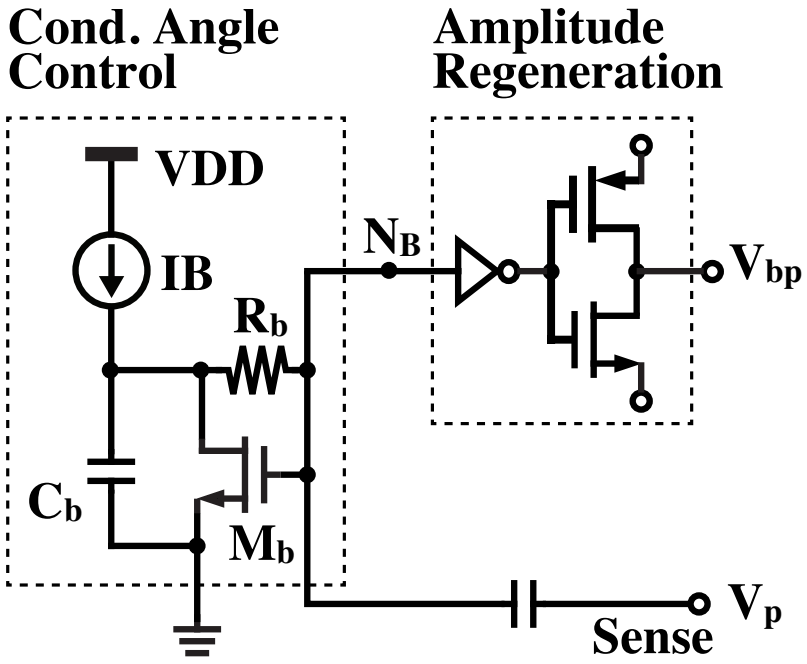

Pulse Drive: Steady State

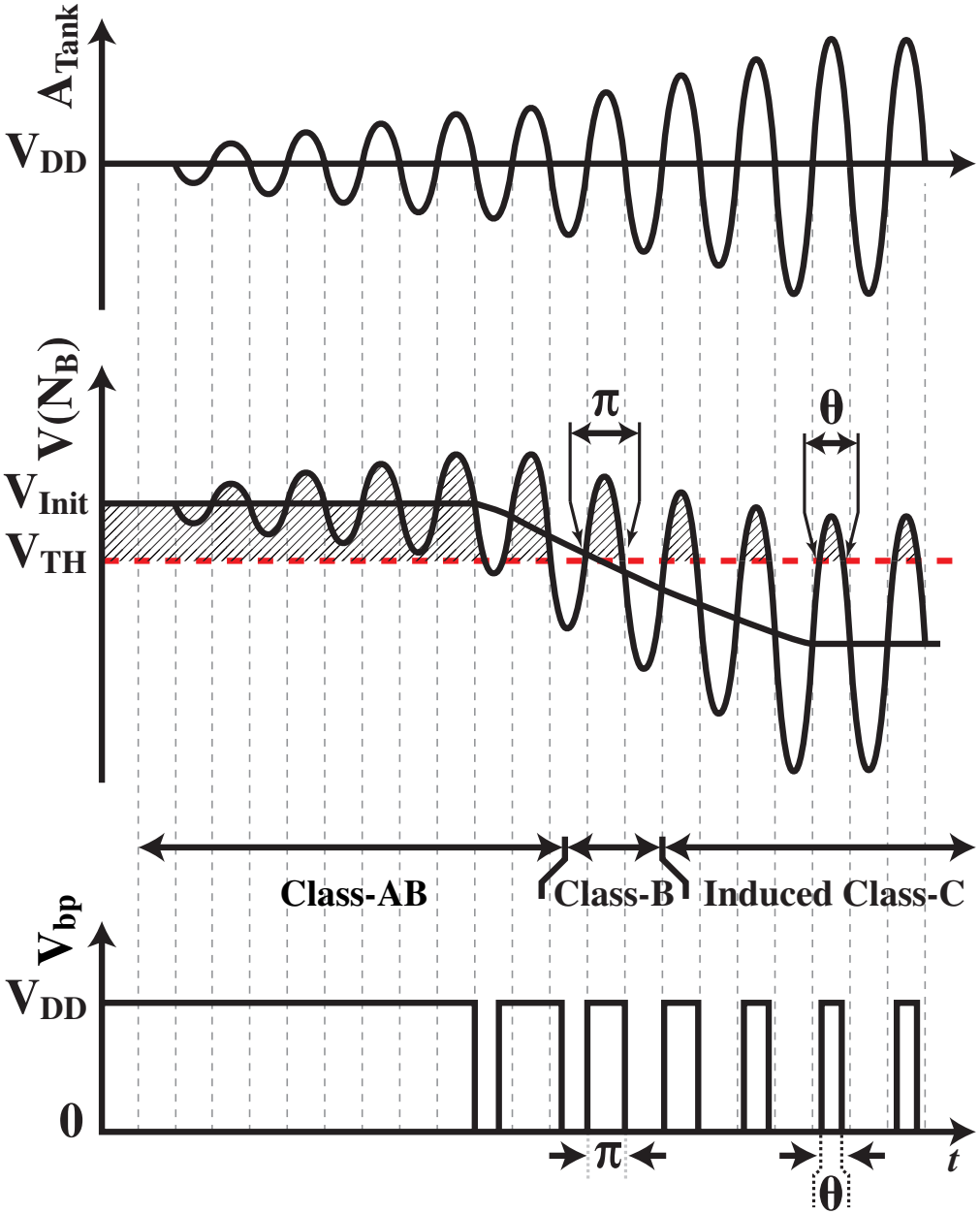

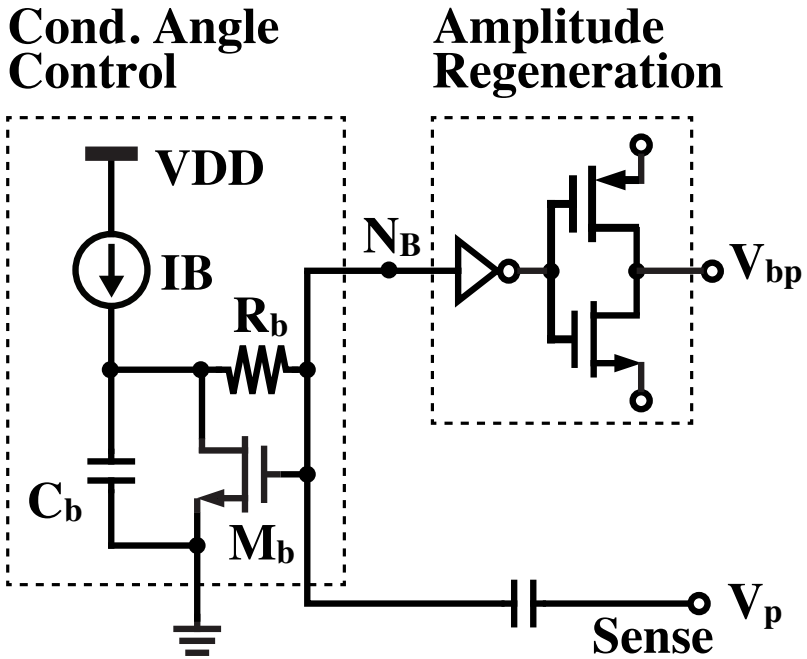

☺ **High Efficiency**

Noise from the additional MOS

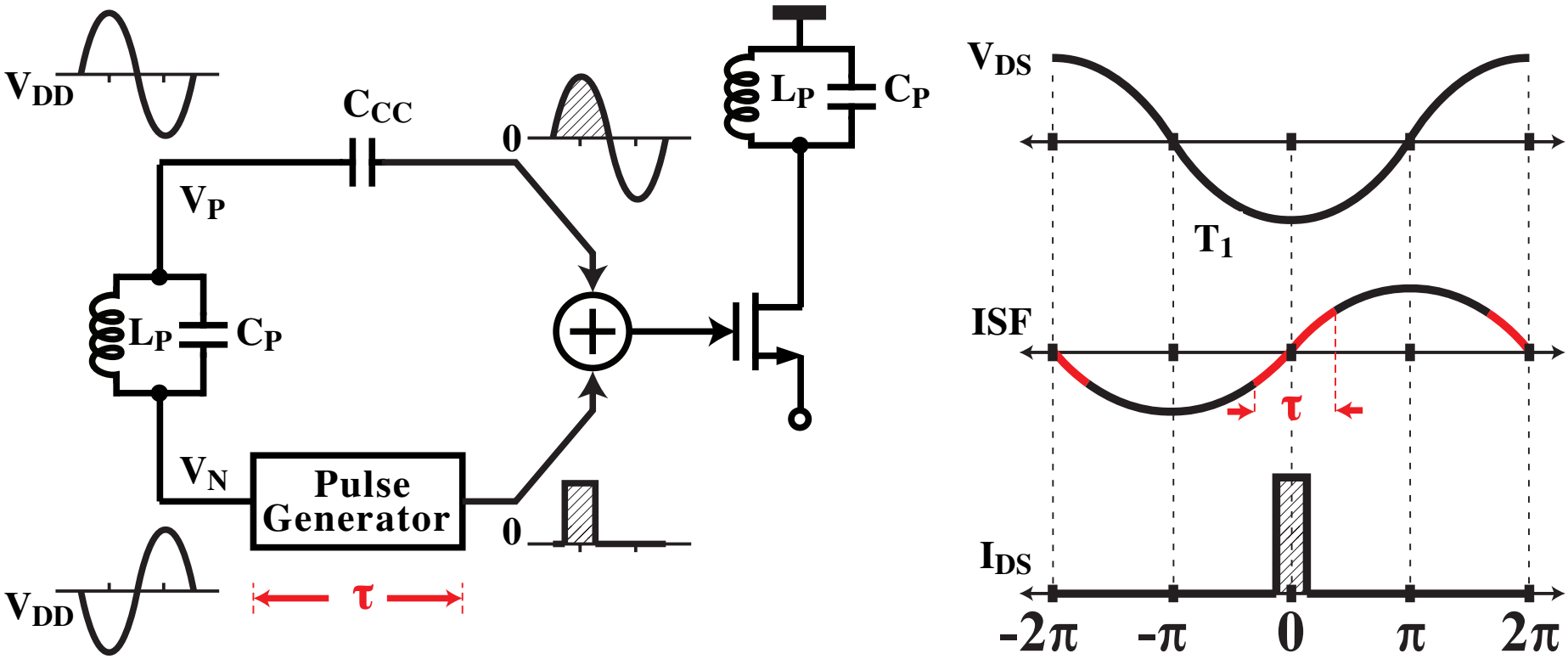

☺ Delay introduced by the inverter is within safe ISF region.

☺ Delay becomes trivial in advanced processes.

Noise Contribution

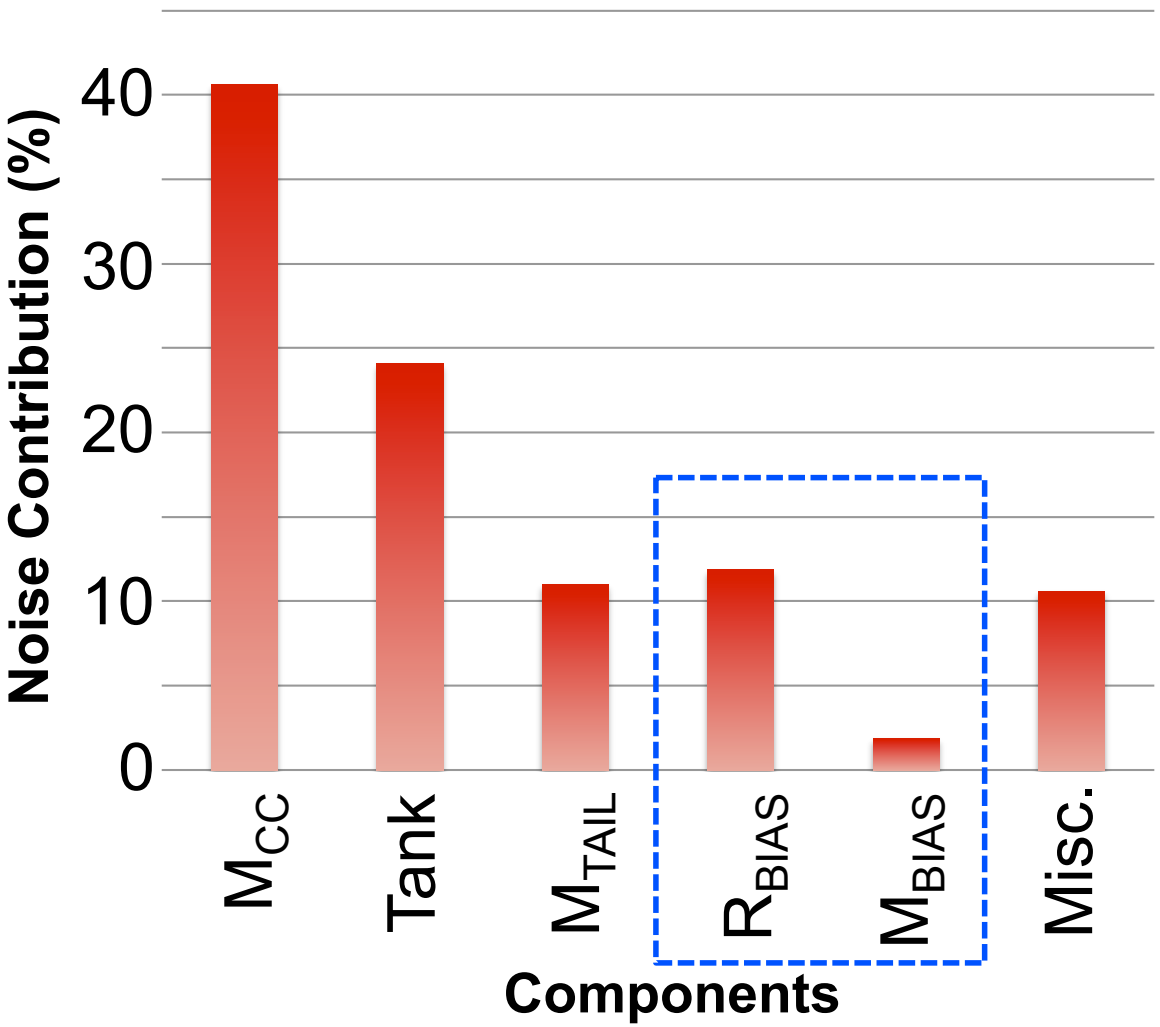

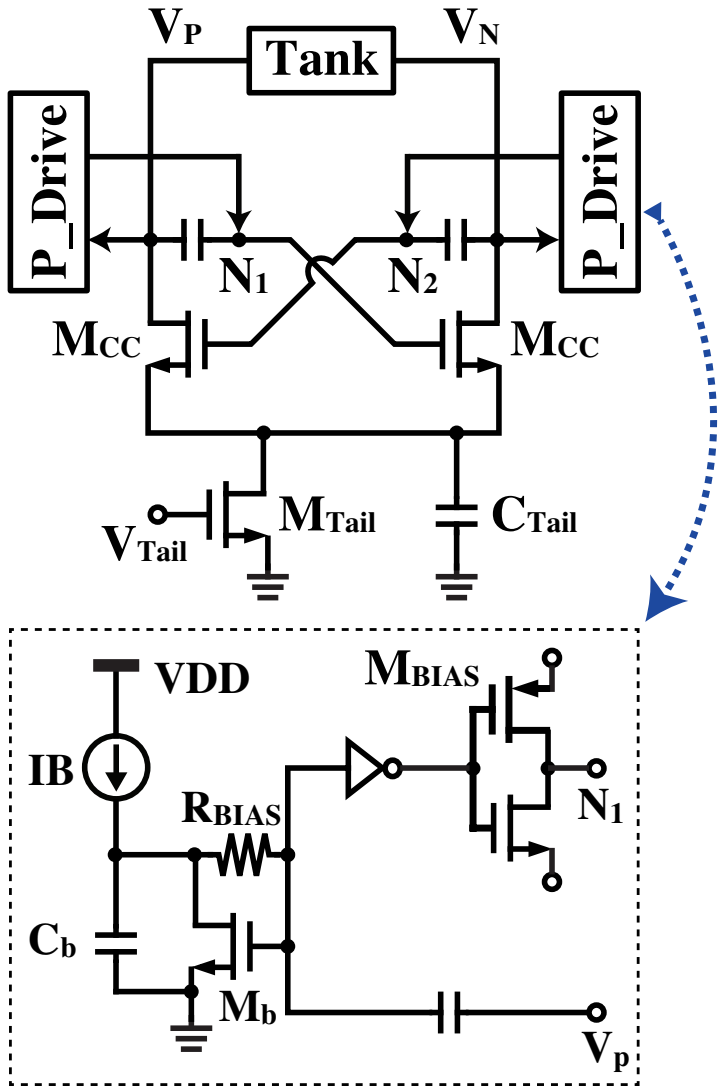

☺ **Noise introduced by the driver circuitry is small.**

Chip Micrograph

Reference VCO

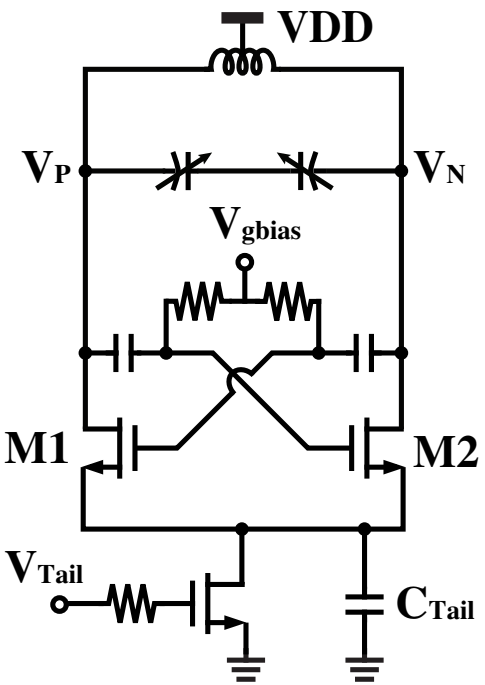

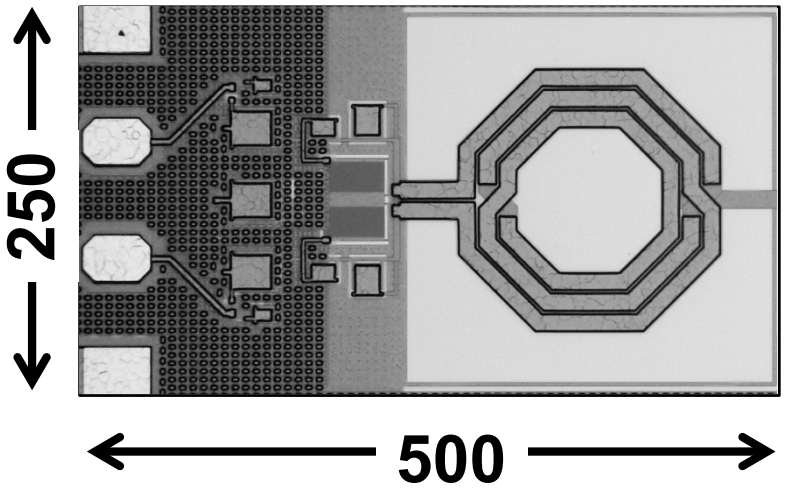

Proposed

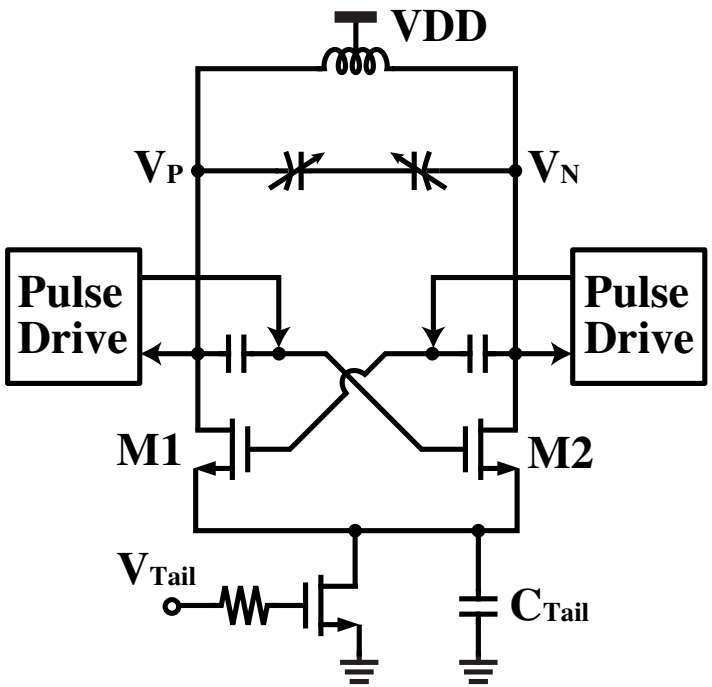

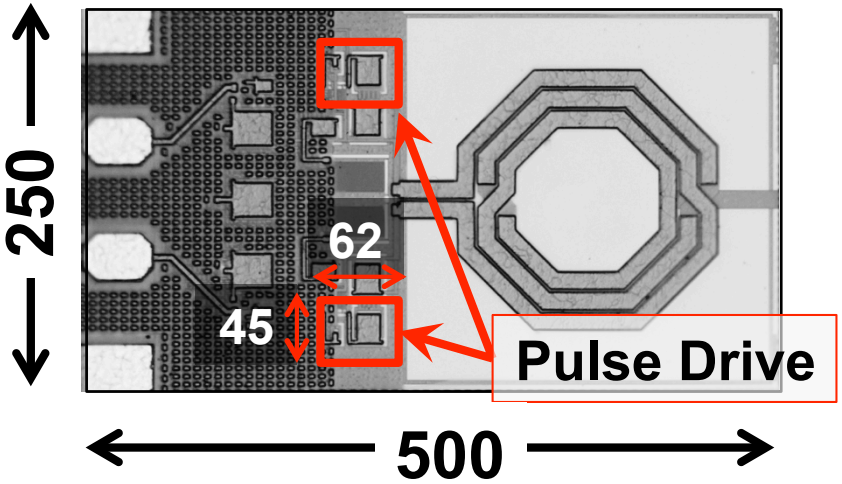

Measurement Results

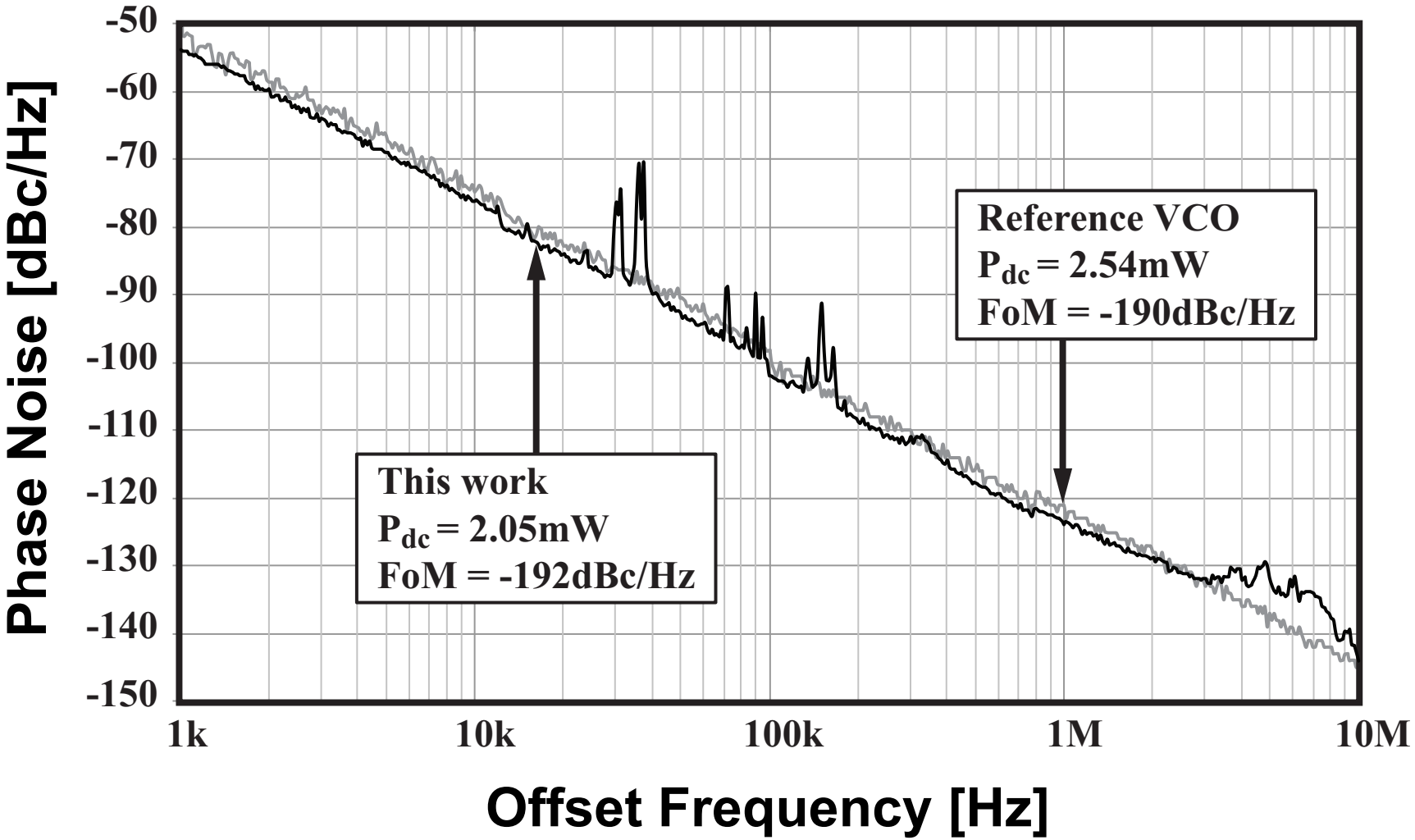

Performance Comparison

	CMOS Process	Frequency [GHz]	Phase Noise [dBc/Hz]	Pdc [mW]	FoM [dBc/Hz]
[1] JSSC2008	130nm	4.9	-130@1MHz	1.30	-196
[2] VLSI2009	180nm	4.5	-109@1MHz	0.16	-190
[3] JSSC2013	180nm	4.84	-125@1MHz	3.40	-193
[4] ESSCIRC2011	90nm	5.1	-120@1MHz	0.86	-192
[5] JSSC2013	65nm	3.7	-142@3MHz	15.0	-192
[6] JSSC2013	65nm	4.8	-144@10Mhz	4.00	-191
This Work	180nm	3.6	-124@1MHz	2.05	**-192**

[1] A. Mazzanti and P. Andreani, JSSC 2008.
[2] K. Okada *et al*., VLSI 2009.
[3] W. Deng *et al*., JSSC 2013.
[4] M. Tohidian *et al*., ESSCIRC 2011.
[5] M. Babaie *et al*., JSSC 2013.
[6] L. Fanori *et al*., JSSC 2008

Conclusion

- A phenomenon in class-C VCO due to which AM noise is up-converted to PN is identified.
- A new technique namely “pulse-drive” is proposed to alleviate AM-PM conversion issue.
- The proposed pulse-drive technique avoids AM-PM conversion without sacrificing efficiency.
- A VCO is implemented using the proposed pulse-drive technique and tested to verify the claims.
- The proposed circuit is however process dependent and has limited frequency of operation.

Simulated Waveforms (1)

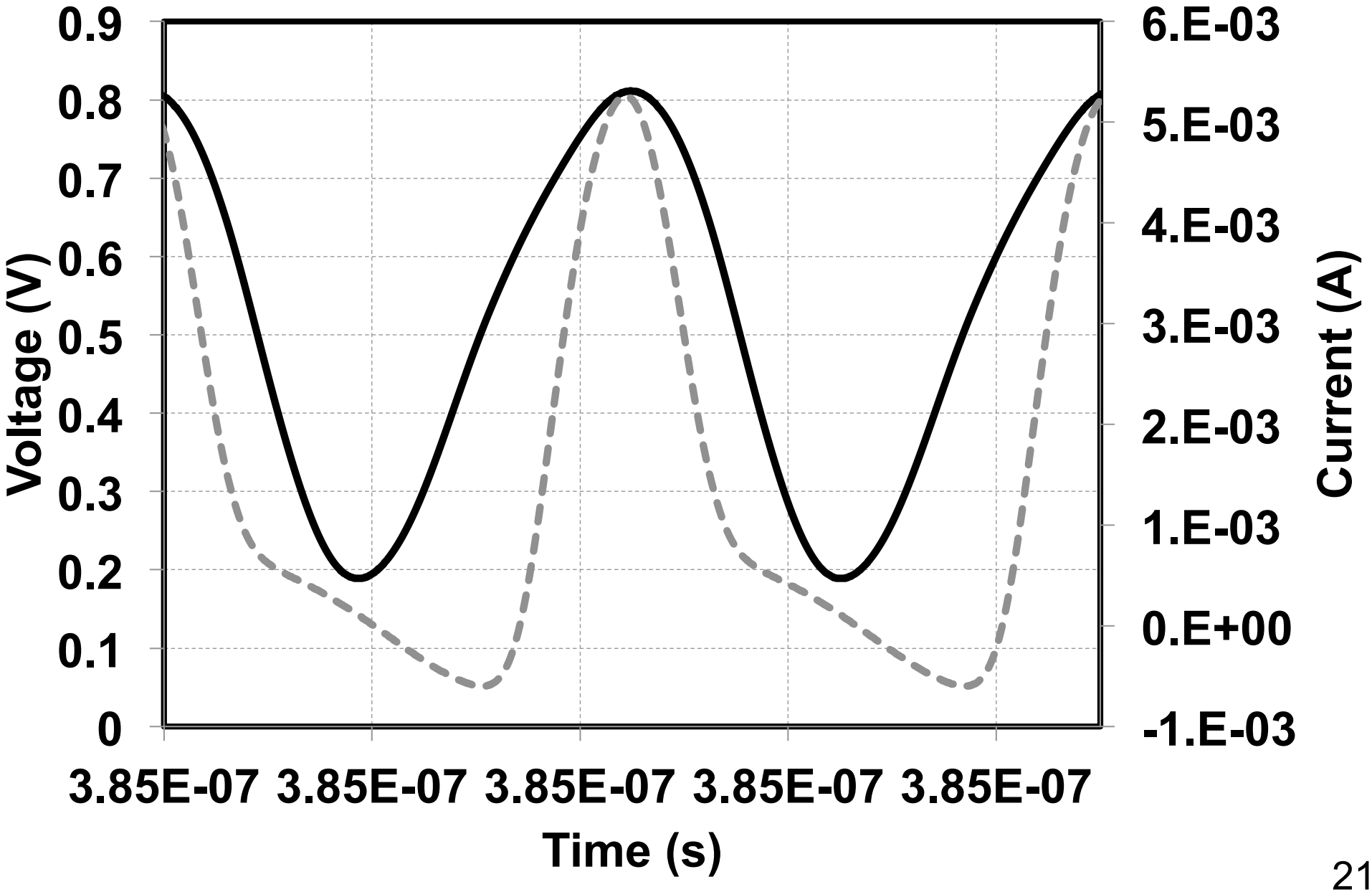

Simulated Waveforms (2)